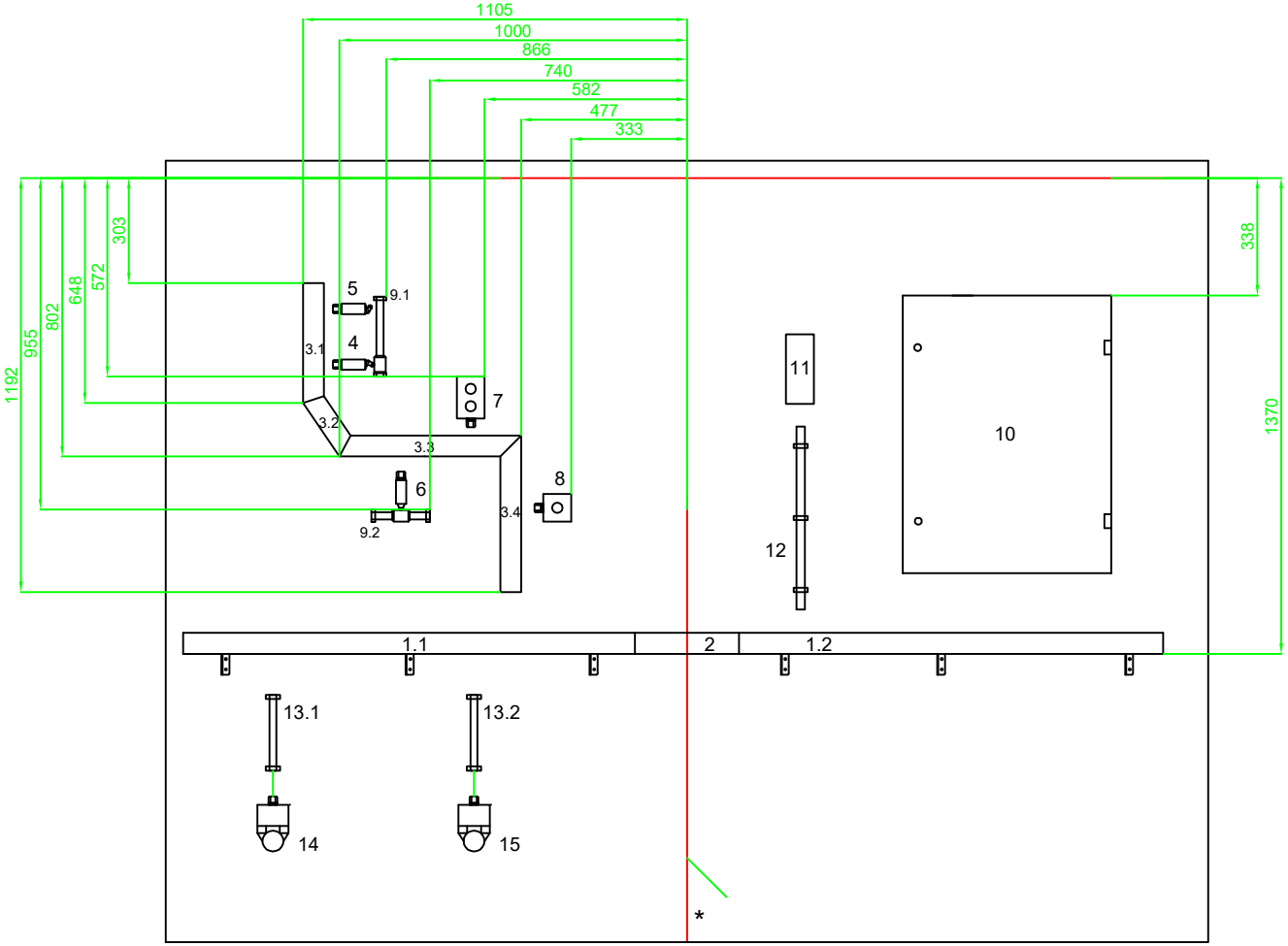

1. mesh tray horizontal
2. 90°bend for mesh tray
3. wall duct 60X60
4. limit switch (S10)
5. limit switch (S11)
6. limit switch (S12)
7. housing (P10, P11)
8. housing (P12)
9. metal pipe ISO25
10. control box 1 (800x600mm)
11. protective earth terminal (-X8)
12. plastic tube VR25
13. plastic tube VR25
14. motor MA1
15. motor MA2

WALL INSTALLATION NOT IN SCALE

* All measurements from a horizontal and vertical line ap 10 - 30mm from the end of the booth.

All devices, which are not in the mesuarements, the mounting is up to the competitor

Skill: SKILL			
Scale: SCALE	Date: DATE	Paper: PAPER	
Drawn / Design by: DRAWN_DESIGN_BY		Drawing No: DRAWING_NO	
Description: DESCRIPTION		Rev: REV	Page: PAGE
DESCRIPTION_LINE_2			

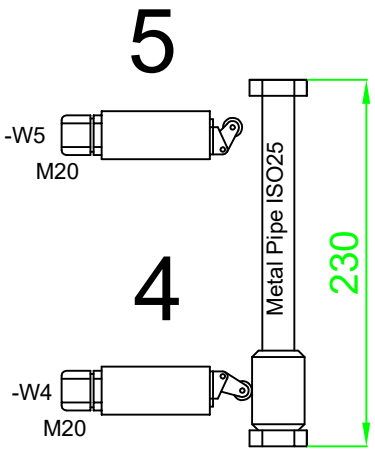

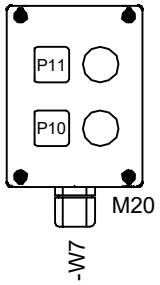

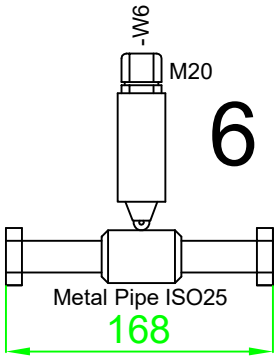

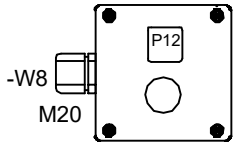

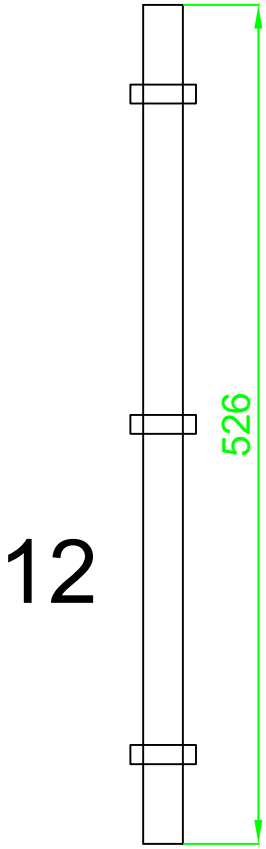

Skillname and No			
Scale:	Date:	Paper:	
Drawn / Design by:		Drawing No:	
Description:		Rev:	Page:
		Appd:	Sign:

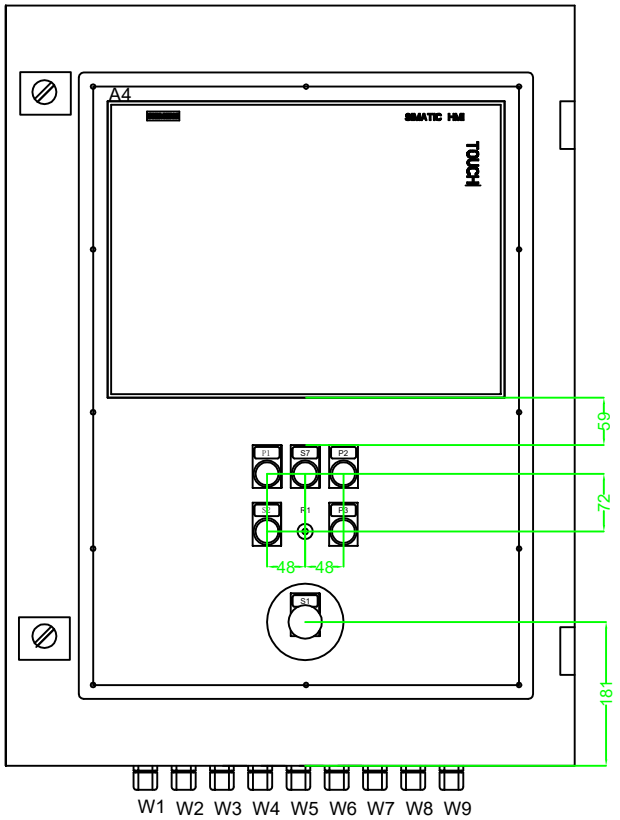

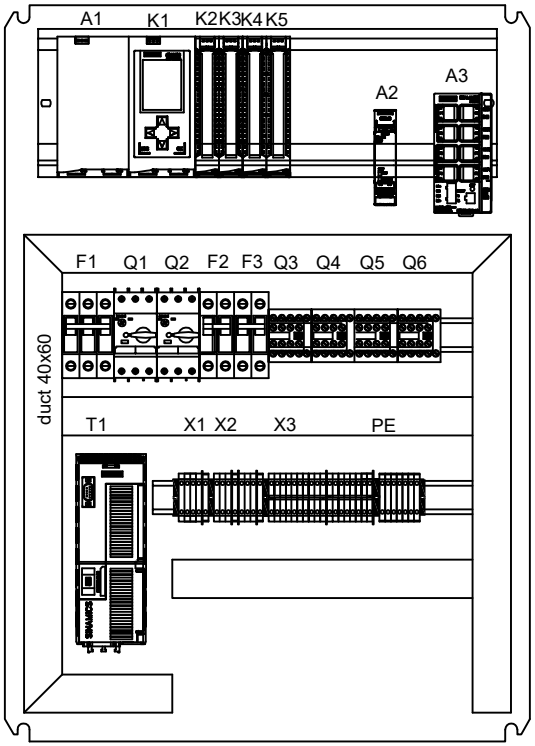

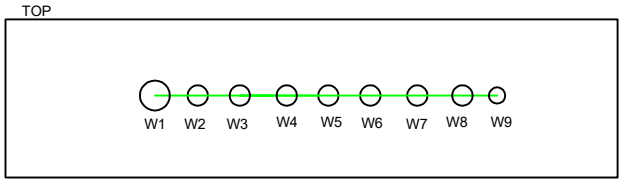

Skillname and No			
Scale:	Date:	Paper:	
Drawn / Design by:		Drawing No:	
Description:		Rev:	Page:
		Appd:	Sign:

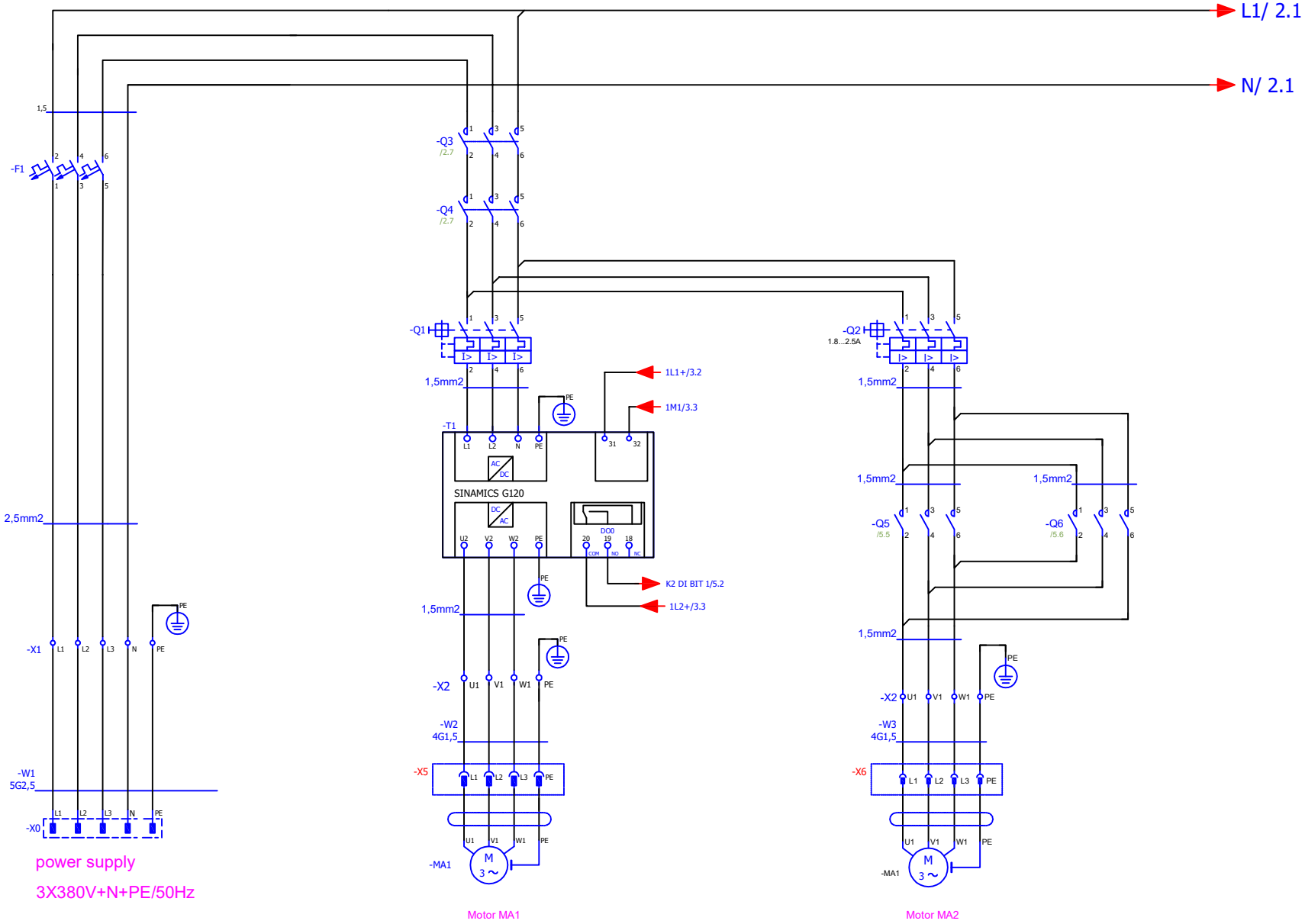

			Datum								=	
			Bearb.								+	
			Gepr									Blatt 1
Änderung	Datum	Name	Urspr		Ersatz von	Ersetzt durch						Blatt 6

2

0 1 2 3 4 5 6 7 8

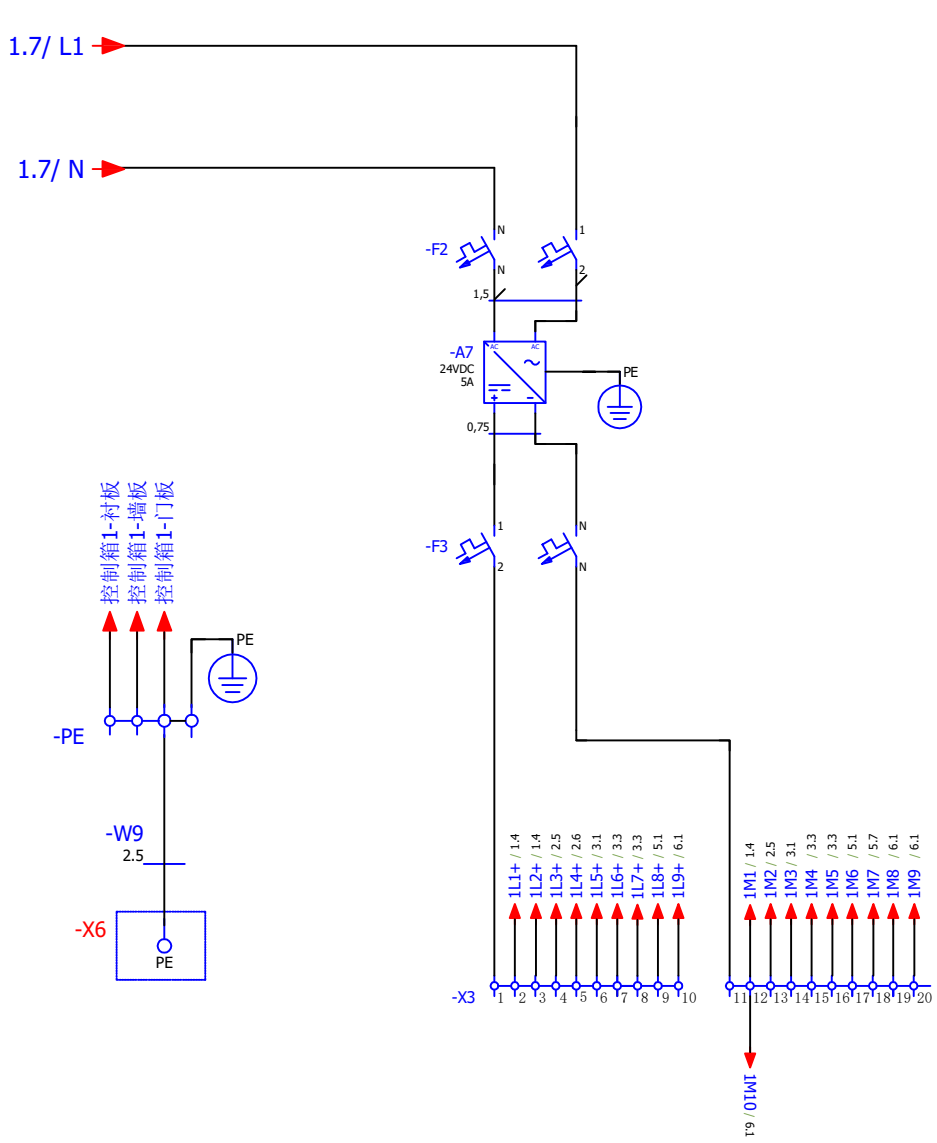

保护接地终端

24V 直流电源

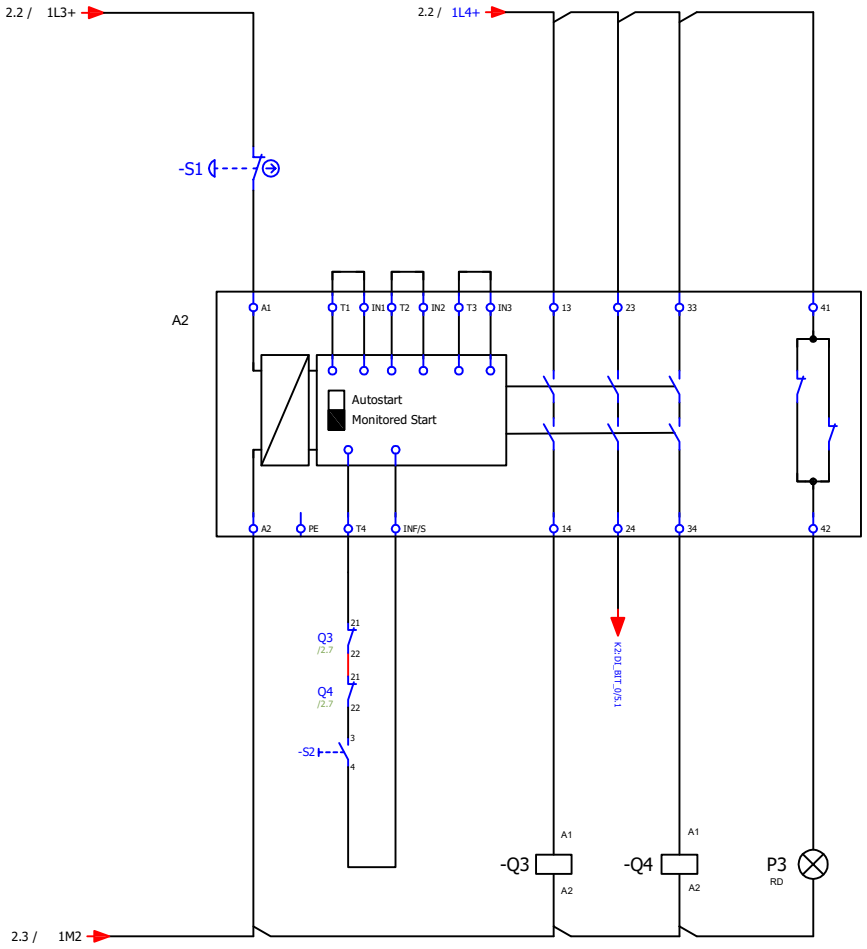

Emergency stop relay

			Datum							=	
			Bearb.							+	
			Gepr								Blatt 2
Änderung	Datum	Name	Urspr		Ersatz von	Ersetzt durch					Blatt 6

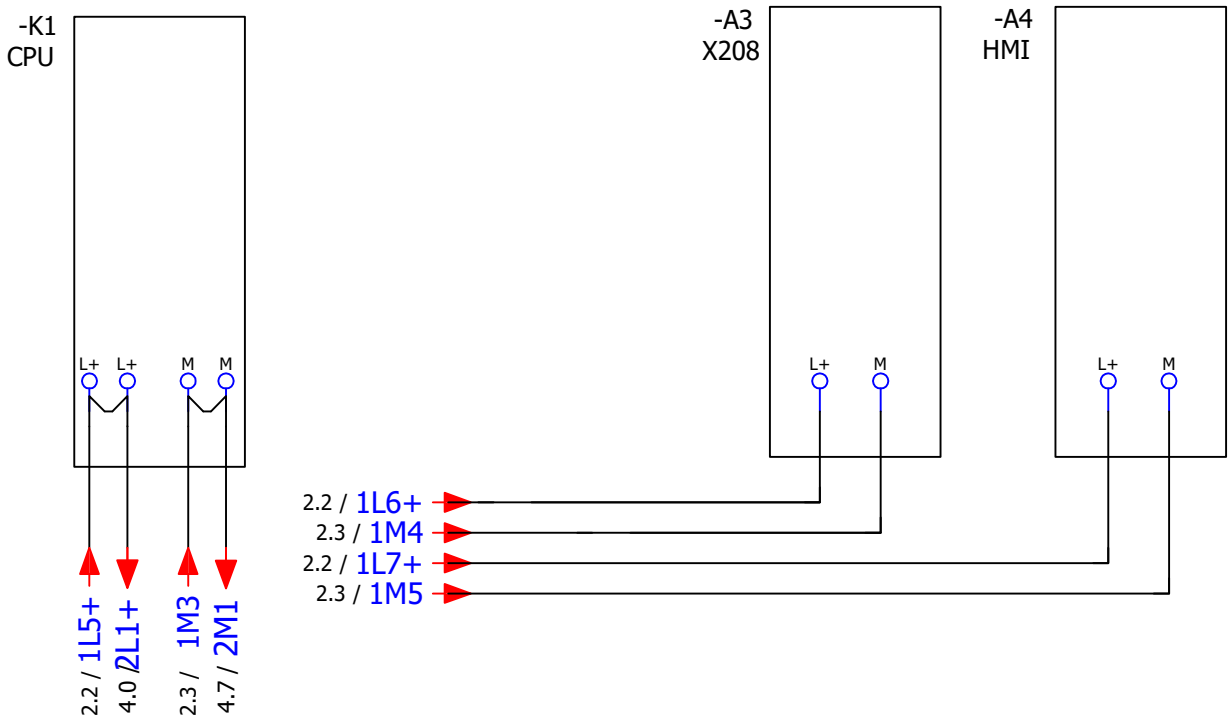

24V 直流电源

			Datum								=	
			Bearb.								+	
			Gepr									Blatt 3
Änderung	Datum	Name	Urspr		Ersatz von	Ersetzt durch						Blatt 6

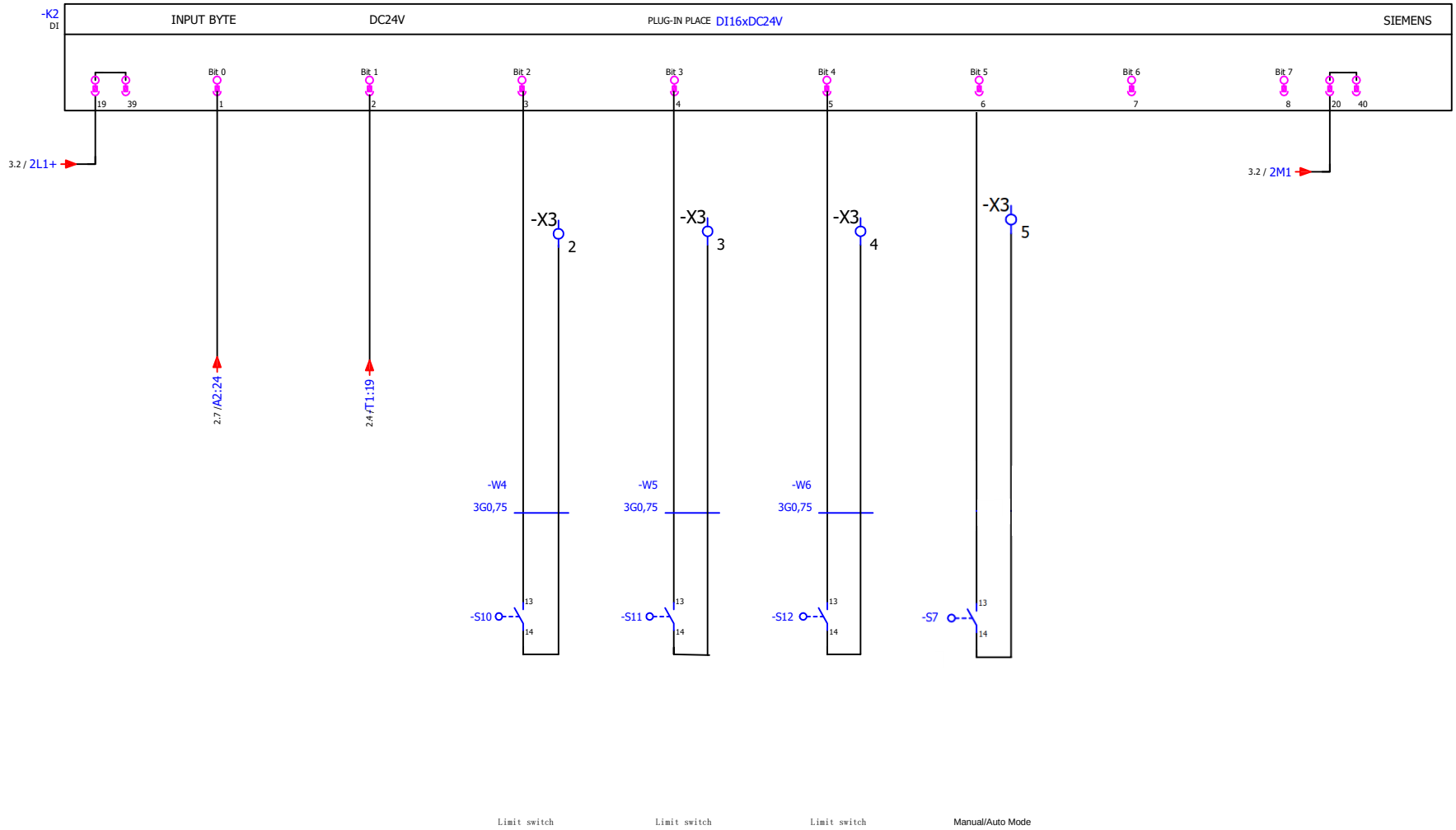

			Datum						=	
			Bearb.						+	
			Gepr							Blatt 4
Änderung	Datum	Name	Urspr		Ersatz von	Ersetzt durch				Blatt 6

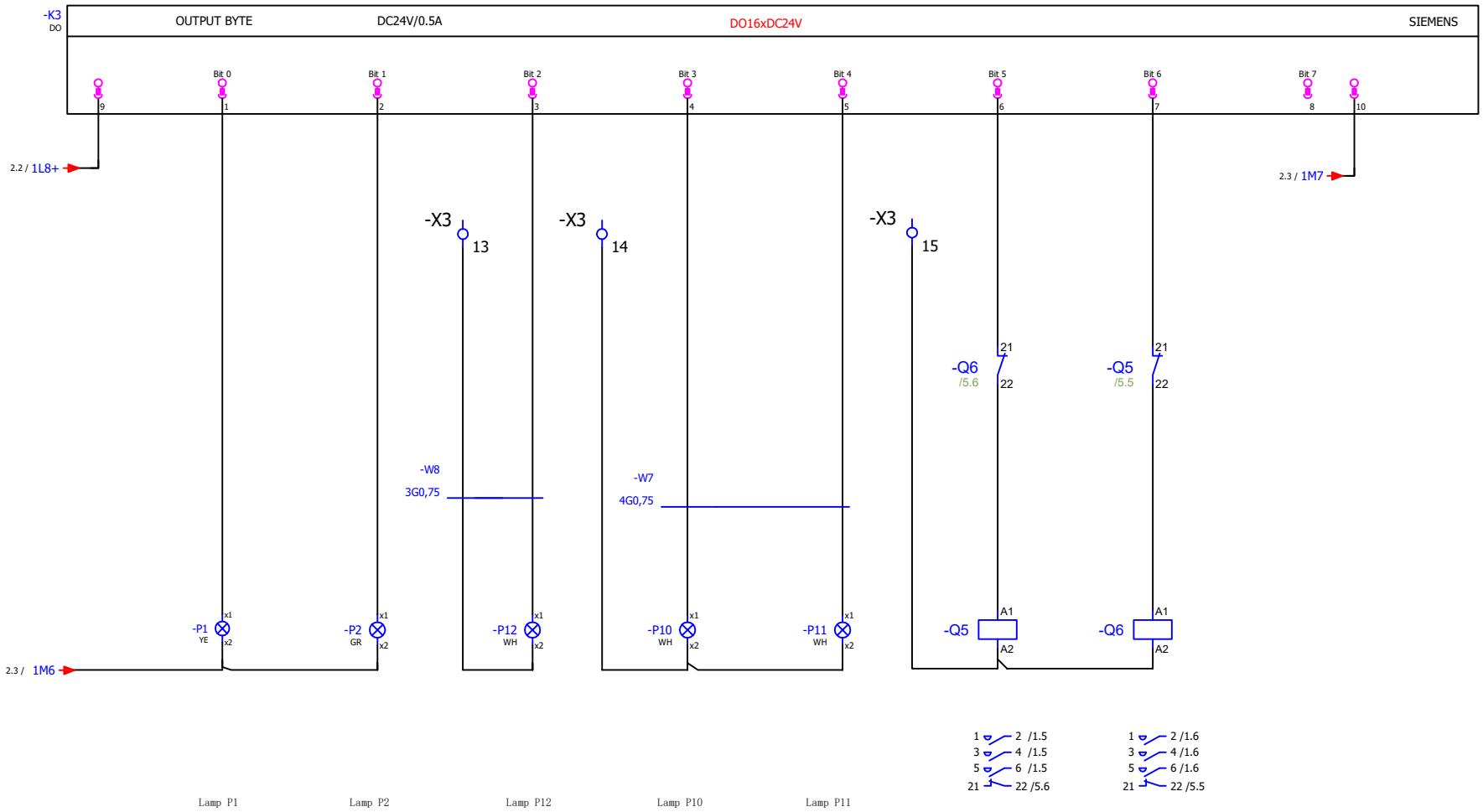

			Datum						=	
			Bearb.						+	
			Gepr							Blatt 5
Änderung	Datum	Name	Urspr		Ersatz von	Ersetzt durch				Blatt 6

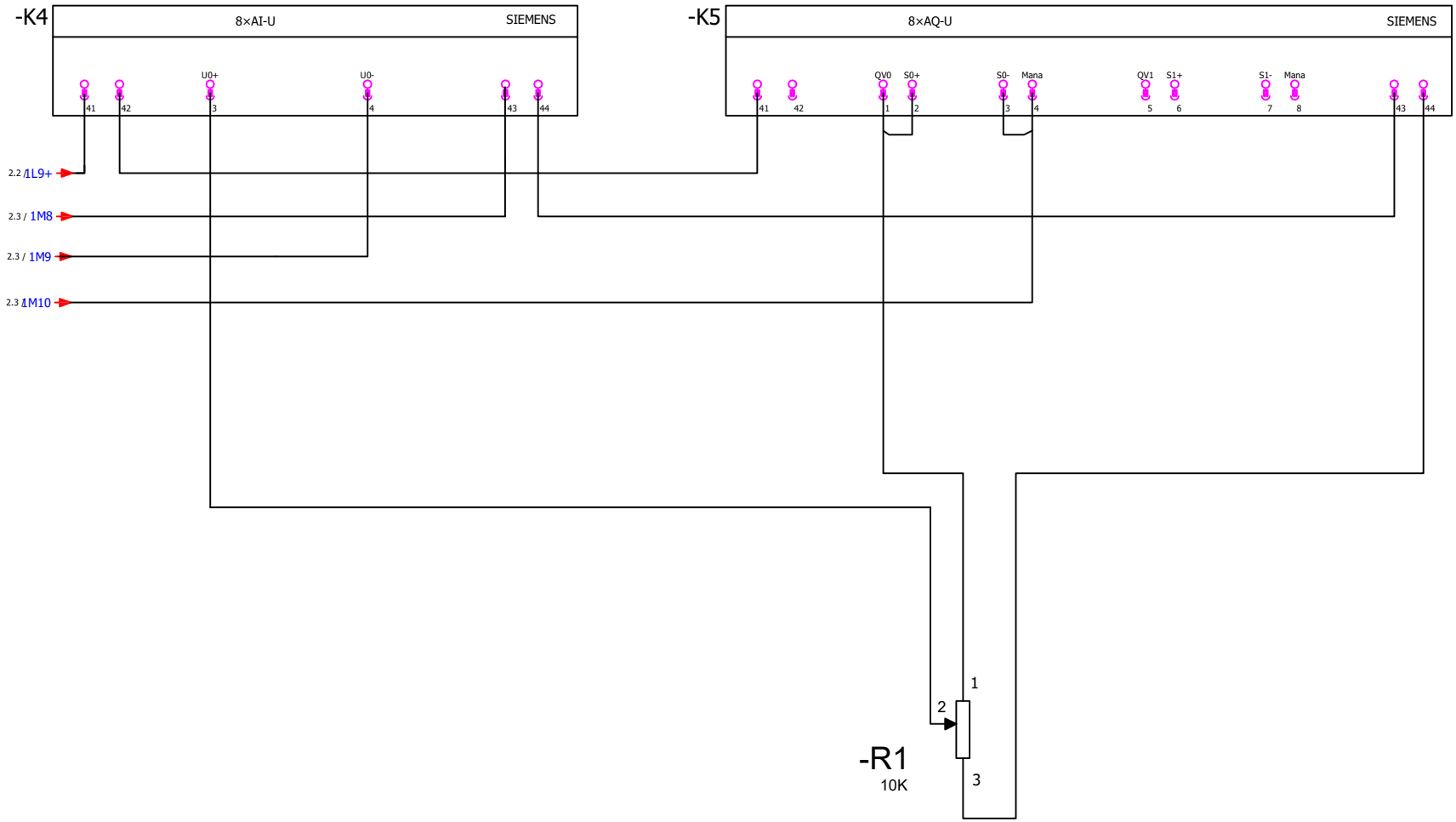

4

			Datum							=	
			Bearb.							+	
			Gepr								Blatt 6
Änderung	Datum	Name	Urspr		Ersatz von	Ersetzt durch					Blatt 6

0 1 2 3 4 5 6 7 8

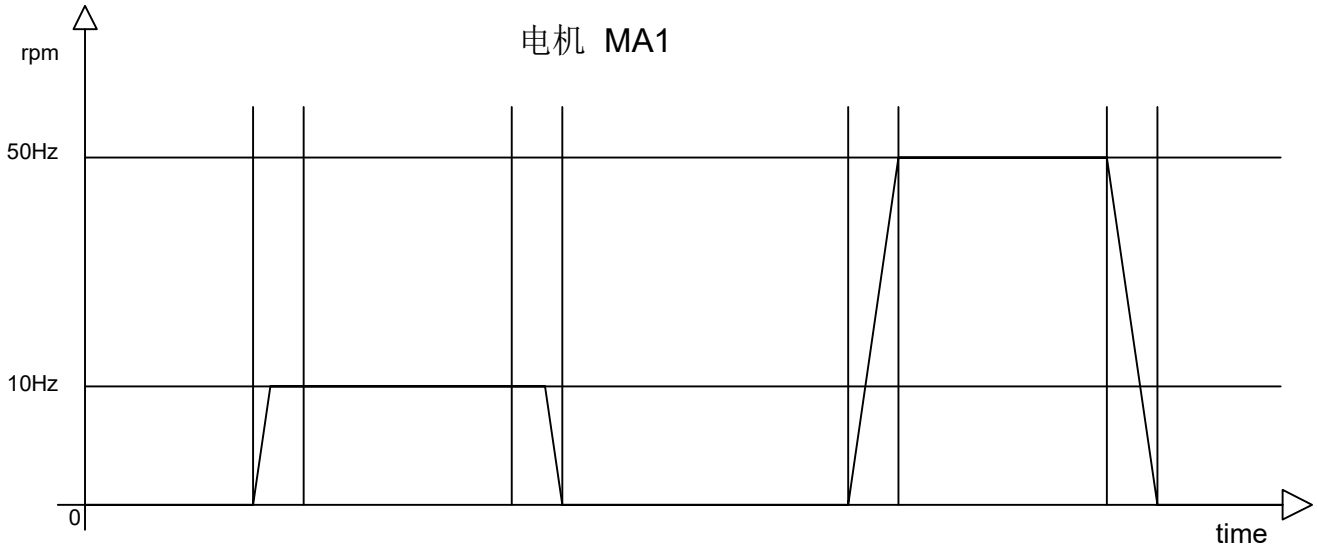

速度在0-speed变化将达到3秒。斜坡必须在变频器中设置。

Skillname and No			
Scale:X:Y	Date:01.2021	Paper: A4	
Drawn / Design by:		Drawing No:	
Description:		Rev: 01	Page:
		Appd:	Sign:

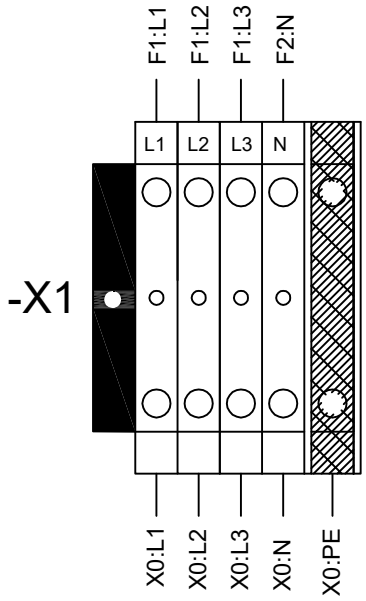
-X1
F1:L1
F1:L2
F1:L3
F2:N
L1
L2
L3
N
X0:L1
X0:L2
X0:L3
X0:N
X0:PE

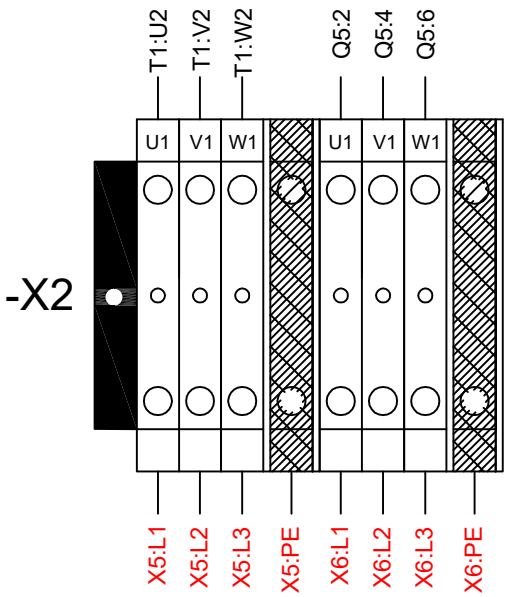
-X2
T1:U2
T1:V2
T1:W2
Q5:2
Q5:4
Q5:6
U1
V1
W1
U1
V1
W1
X5:L1
X5:L2
X5:L3
X5:PE
X6:L1
X6:L2
X6:L3
X6:PE

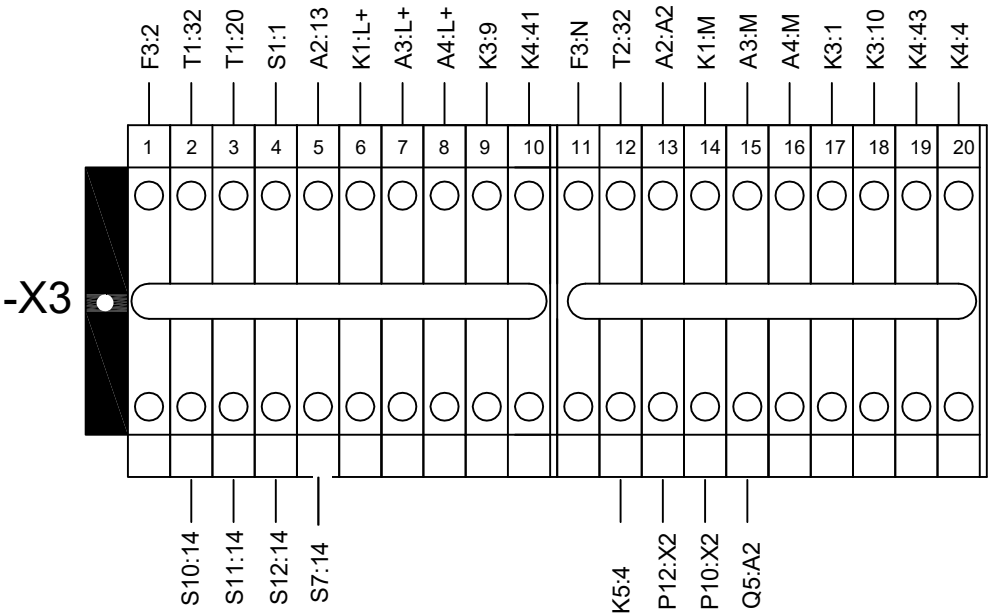
-X3
F3:2
T1:32
T1:20
S1:1
A2:13
K1:L+
A3:L+
A4:L+
K3:9
K4:41
F3:N
T2:32
A2:A2
K1:M
A3:M
A4:M
K3:1
K3:10
K4:43
K4:4
1
2
3
4
5
6
7
8
9
10
11
12
13
14
15
16
17
18
19
20
S10:14
S11:14
S12:14
S7:14
K5:4
P12:X2
P10:X2
Q5:A2

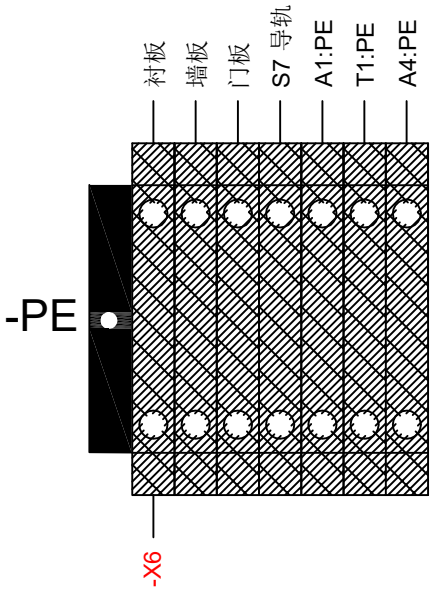
-PE
衬板
墙板
门板
S7 导轨
A1:PE
T1:PE
A4:PE
-X6

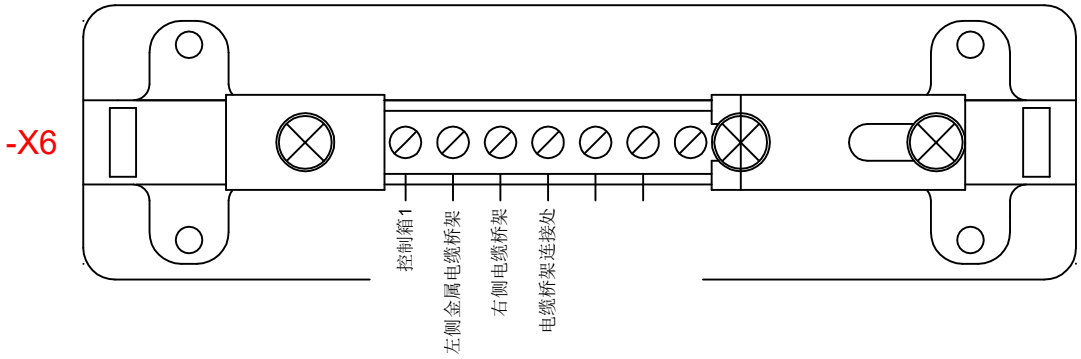
-X6
控制箱1
左侧金属电缆桥架
右侧电缆桥架
电缆桥架连接处

-PE

控制箱 1

CABLE LIST

Nr.	Cable type	intern		extern	Description
W1	RW-5G2.5	X0	----->	X1	Power Supply 3x400V+N+PE
W2	RW-4G1.5	X2	----->	X5	CEE socket 400V(MA1)
W3	RW-4G1.5	X2	----->	X6	CEE socket 400V(MA2)
W4	RW-3G0.75	X3	----->	S10	Limit switch
W5	RW-3G0.75	X3	----->	S11	Limit switch
W6	RW-3G0.75	X3	----->	S12	Limit switch
W7	RW-4G0.75	X3	----->	P10、P11	Signal lamp
W8	RW-3G0.75	X3	----->	P12	Signal lamp
W9	RV-6	PE	----->	X6	protective earth terminal

HMI-CONFIGURATION

SCREEN OVERVIEW_MANUAL MODE

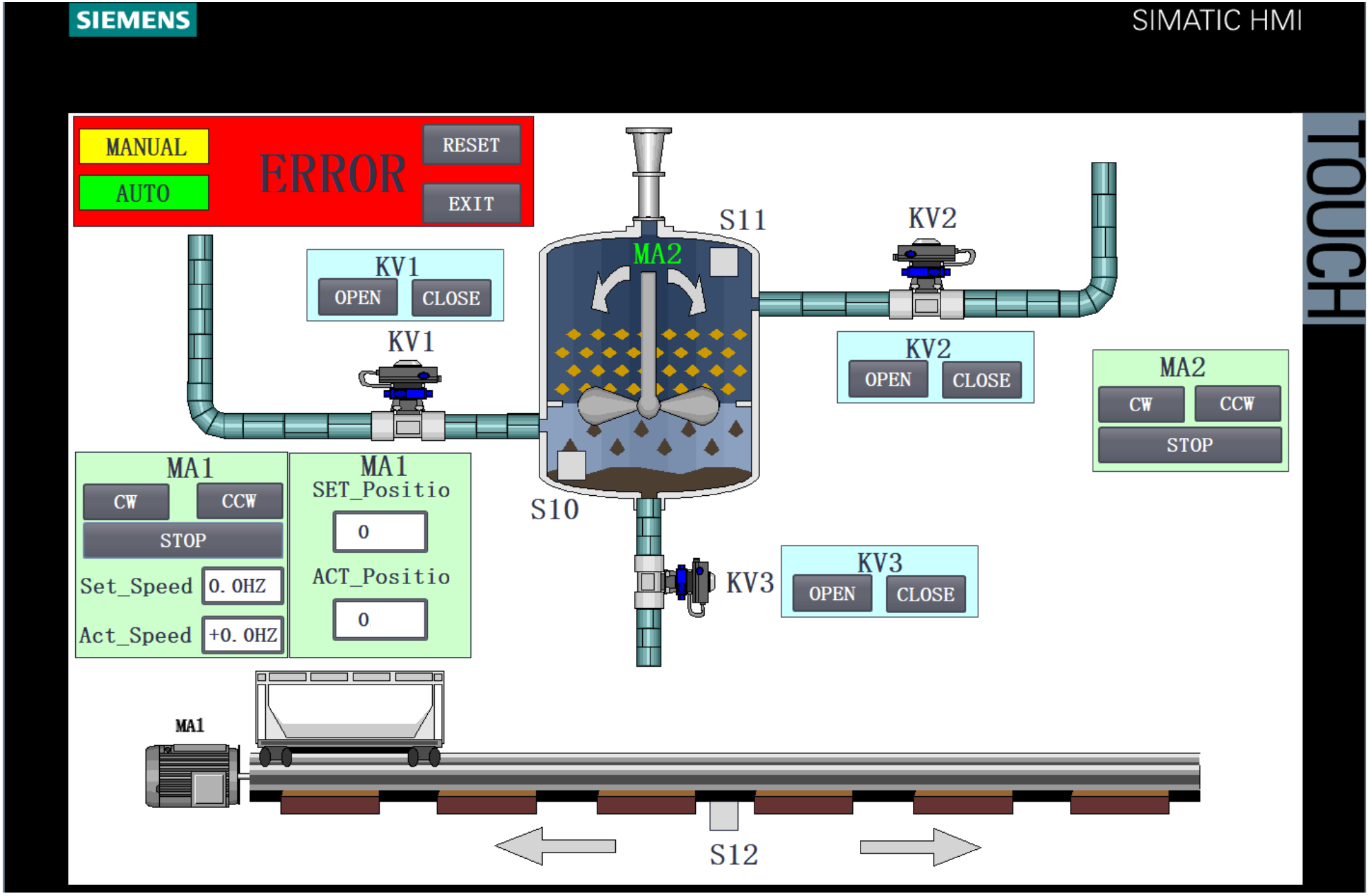

HMI-CONFIGURATION

SCREEN OVERVIEW_AUTOMATIC MODE

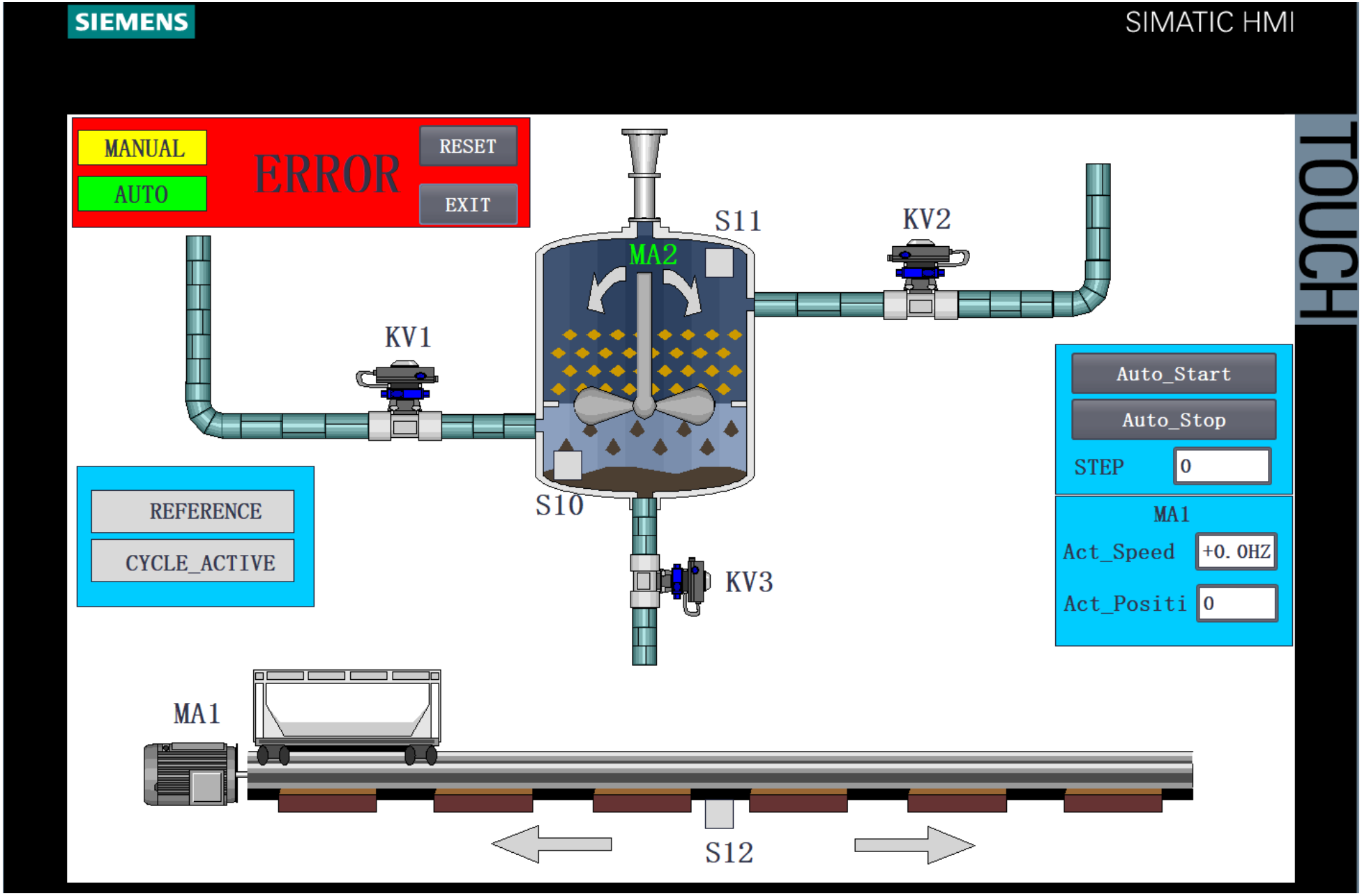

HMI VARIABLES

SYMBOL	TYPE	COMMENT	IN USE
K2:DI_BIT_0	BOOL	PLC-input	Read
K2:DI_BIT_1	BOOL	PLC-input	Read
S10	BOOL	PLC-input	Read
S11	BOOL	PLC-input	Read
S12	BOOL	PLC-input	Read
P10	BOOL	PLC-input	Read
P11	BOOL	PLC-input	Read
P12	BOOL	PLC-Output	Read
Manual mode	BOOL	PLC-Variable	Read
Automatic mode	BOOL	PLC-Variable	Read
ERROR	BOOL	PLC-Variable	Read
RESET	BOOL	PLC-Variable	Write
KV1_CLOSE	BOOL	PLC-Variable	Write
KV1_OPEN	BOOL	PLC-Variable	Write
KV1_IS_ON	BOOL	PLC-Variable	Read
KV2_CLOSE	BOOL	PLC-Variable	Write
KV2_OPEN	BOOL	PLC-Variable	Write
KV2_IS_ON	BOOL	PLC-Variable	Read
KV3_CLOSE	BOOL	PLC-Variable	Write
KV3_OPEN	BOOL	PLC-Variable	Write
KV3_IS_ON	BOOL	PLC-Variable	Read
MA2_CW	BOOL	PLC-Variable	Write
MA2_CW_ON	BOOL	PLC-Variable	Read
MA2_IS_ON	BOOL	PLC-Variable	Read
MA2_CCW	BOOL	PLC-Variable	Write
MA2_STOP	BOOL	PLC-Variable	Write
MA2_CCW_ON	BOOL	PLC-Variable	Read
MA1_IS_ON	BOOL	PLC-Variable	Read
MA1_STOP	BOOL	PLC-Variable	Write
MA1_CW	BOOL	PLC-Variable	Write
MA1_CW_ON	BOOL	PLC-Variable	Read
MA1_CCW	BOOL	PLC-Variable	Write
MA1_CCW_ON	BOOL	PLC-Variable	Read

HMI VARIABLES

SYMBOL	TYPE	COMMENT	IN USE
Reference	BOOL	PLC-Variable	Read
Auto_Stop	BOOL	PLC-Variable	Write
Auto_Start	BOOL	PLC-Variable	Write
Cycle_active	BOOL	PLC-Variable	Read
MA1_SET_SPEED	REAL	PLC-Variable	Write
MA1_ACT_SPEED	REAL	PLC-Variable	Read
MA1_SET_POSITION	INT	PLC-Variable	Write
MA1_ACT_POSITION	INT	PLC-Variable	Read
STEP	INT	PLC-Variable	Read

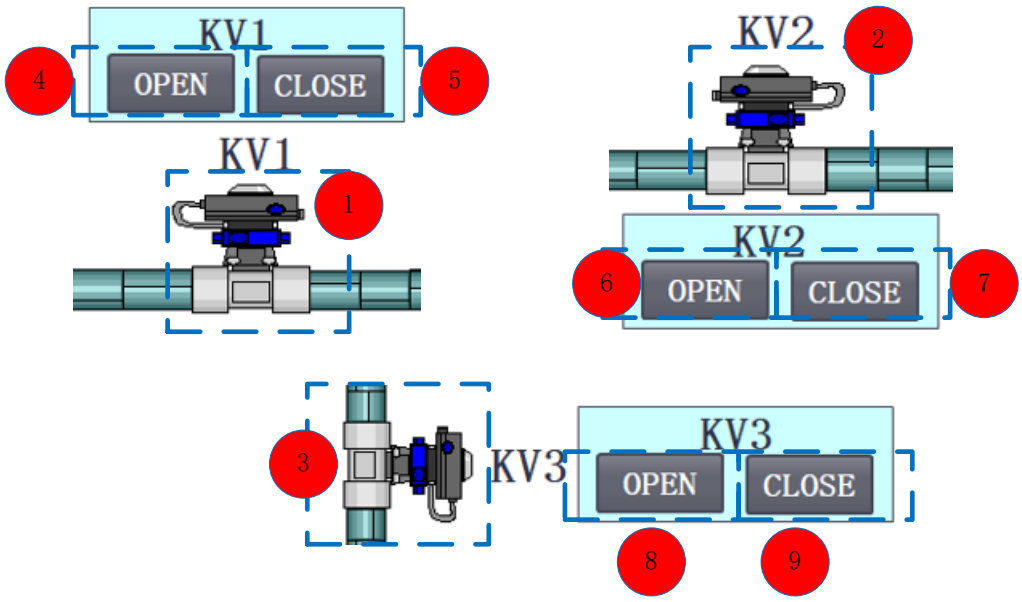

DESCRIPTION	SYMBOL LIBRARY	SYMBOL LIBRARY ITEM
Segmented Pipes	Segmented Pipes	3-pieve vertical segmented pipe
VALVES	VALVES	Plastic control valve
Segmented Pipes	Segmented Pipes	90° degree bend 3

POSTION	VARIABLE	ACTION	COMMENT
1	KV1_IS_ON	Foreground Control Colour	not actuated colour = GRAY actuated colour = GREEN
2	KV2_IS_ON	Foreground Control Colour	not actuated colour = GRAY actuated colour = GREEN
3	KV3_IS_ON	Foreground Control Colour	not actuated colour = GRAY actuated colour = GREEN
4	KV1_OPEN	Button control	“State 1” while button is pressed
5	KV1_CLOSE	Button control	“State 1” while button is pressed
6	KV2_OPEN	Button control	“State 1” while button is pressed
7	KV2_CLOSE	Button control	“State 1” while button is pressed
8	KV3_OPEN	Button control	“State 1” while button is pressed
9	KV3_CLOSE	Button control	“State 1” while button is pressed

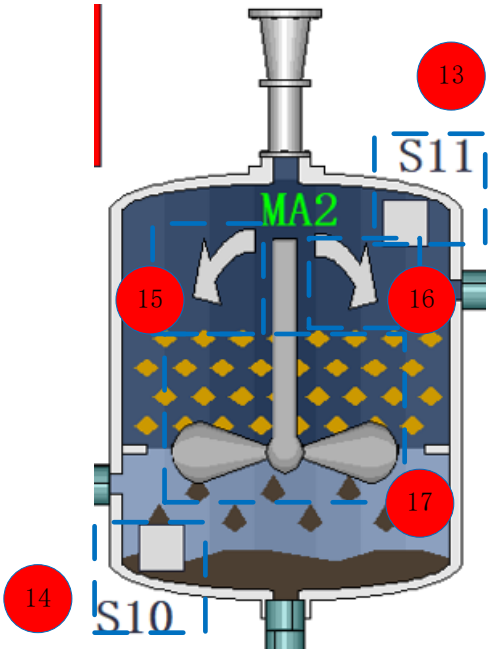

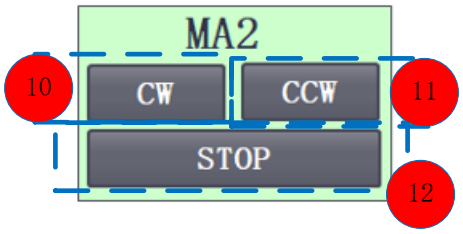

DESCRIPTION	SYMBOL LIBRARY	SYMBOL LIBRARY ITEM
Flow Meters	Flow Meters	Venturi flow meter 1
Chemical	Chemical	Process mixer
Arrows	Arrows	Curving arrow
Mixers	Mixers	Mixer blade

POSTION	VARIABLE	ACTION	COMMENT
10	MA2_CW	Button control	“State 1” while button is pressed
11	MA2_CCW	Button control	“State 1” while button is pressed
12	MA2_STOP	Button control	“State 1” while button is pressed
13	S11	Background Control Colour	not actuated colour = GRAY actuated colour = RED
14	S10	Background Control Colour	not actuated colour = GRAY actuated colour = RED
15	MA2_CW_ON	Foreground Control Colour	not actuated colour = GRAY actuated colour = GREEN
16	MA2_CCW_ON	Foreground Control Colour	not actuated colour = GRAY actuated colour = GREEN
17	MA2_IS_ON	Foreground Control Colour	not actuated colour = GRAY actuated colour = GREEN

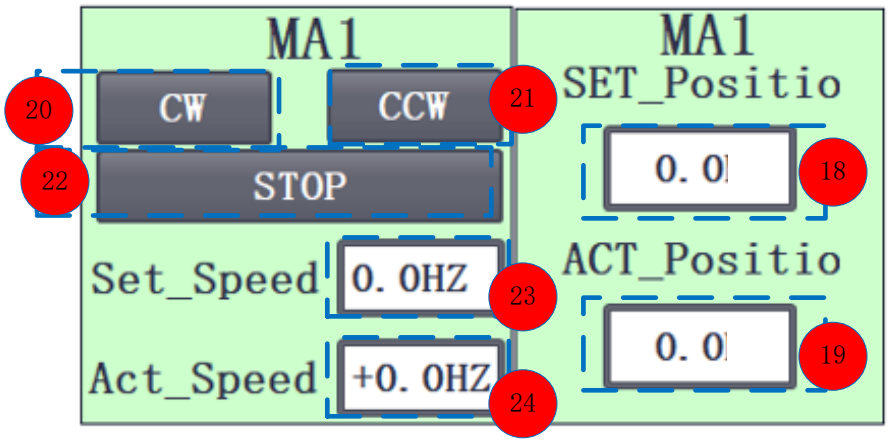

POSTION	VARIABLE	ACTION	COMMENT
18	MA1_SET_POSITION	Input/output field	Value: 0 to 60.0
19	MA1_ACT_POSITION	output field	Value: 0 to 60.0
20	MA1_CW	Button control	“State 1” while button is pressed
21	MA1_CCW	Button control	“State 1” while button is pressed
22	MA1_STOP	Button control	“State 1” while button is pressed
23	MA1_SET_SPEED	Input/output field	Value: 0.0 to 50.0
24	MA1_ACT_SPEED	output field	Value: -50.0 to 50.0

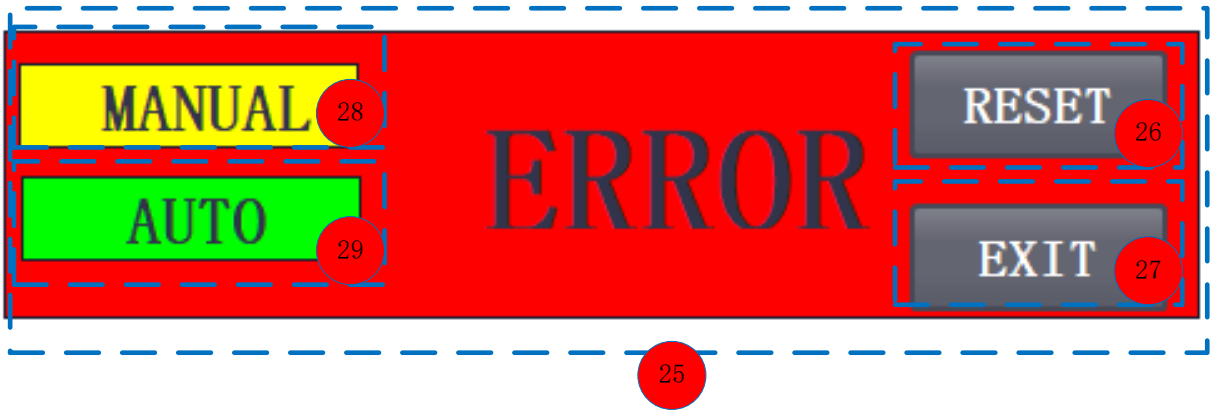

POSTION	VARIABLE	ACTION	COMMENT
25	ERROR	Background Control Colour	not actuated colour = GRAY actuated colour = RED
26	RESET	Button control	“State 1” while button is pressed
27	EXIT	Button control	Exit the system
28	Manual Mode	Background Control Colour	not actuated colour = GRAY actuated colour = YELLOW
29	Automatic Mode	Background Control Colour	not actuated colour = GRAY actuated colour = GREEN

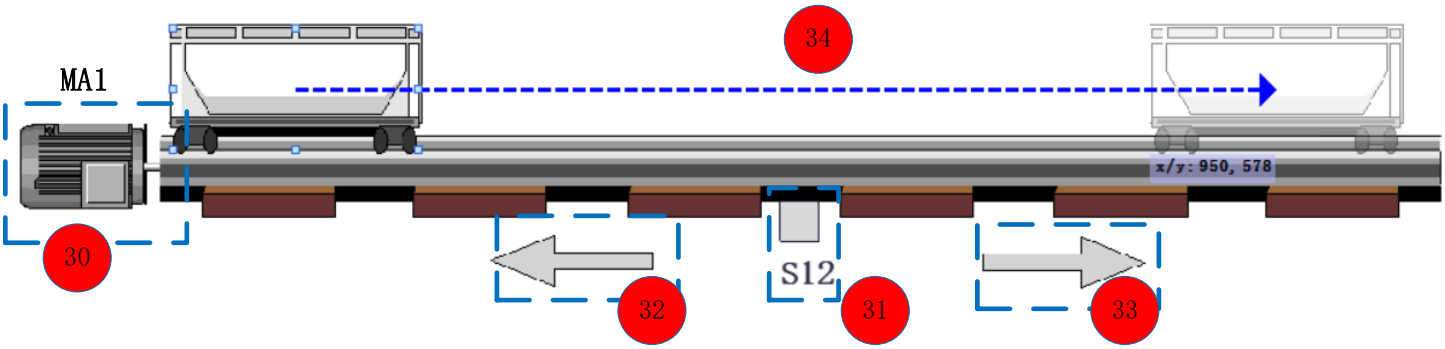

DESCRIPTION	SYMBOL LIBRARY	SYMBOL LIBRARY ITEM
Motors	Flow Meters	Motor 5
Arrows	Chemical	Straight arrow 1
Vehicles	Vehicles	Railorad box car 2
Vehicles	Vehicles	Railroad track

POSTION	VARIABLE	ACTION	COMMENT
30	MA1_IS_ON	Background Control Colour	not actuated colour = GRAY actuated colour = GREEN
31	S12	Background Control Colour	not actuated colour = GRAY actuated colour = GREEN
32	MA1_CCW_ON	Foreground Control Colour	not actuated colour = GRAY actuated colour = GREEN
33	MA1_CW_ON	Foreground Control Colour	not actuated colour = GRAY actuated colour = GREEN
34	MA1_SET_POSITION	Horziontal movement	Start value = 0 Eed value = 60

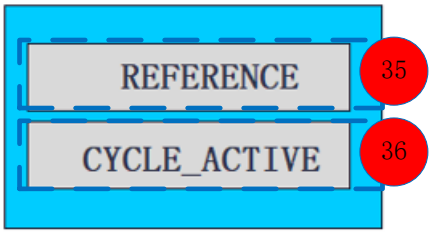

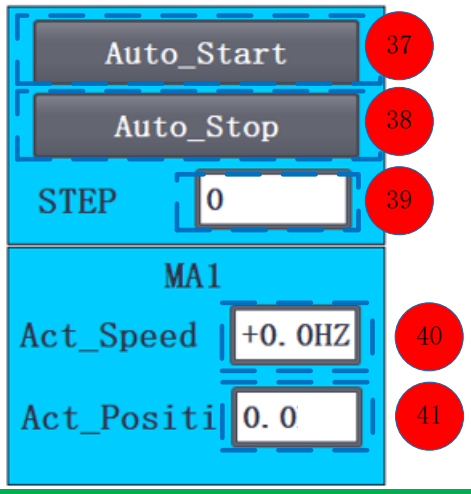

POSTION	VARIABLE	ACTION	COMMENT
35	REFERENCE	Background Control Colour	not actuated colour = GRAY actuated colour = GREEN
36	CYCLE_ACTIVE	Background Control Colour	not actuated colour = GRAY actuated colour = GREEN
37	Auto_Start	Button control	“State 1” while button is pressed
38	Auto_Stop	Button control	“State 1” while button is pressed
39	STEP	output field	Value: 0 to 99
40	MA1_ACT_SPEED	Output field	Value: -50.0 to 50.0
41	MA1_ACT_POSITION	output field	Value: 0 to 60.0

Note:

switches, push buttons or other devices **actuated = state "1"** on the function diagram

switches, push buttons or other devices **not actuated = state "0"** on the function diagram

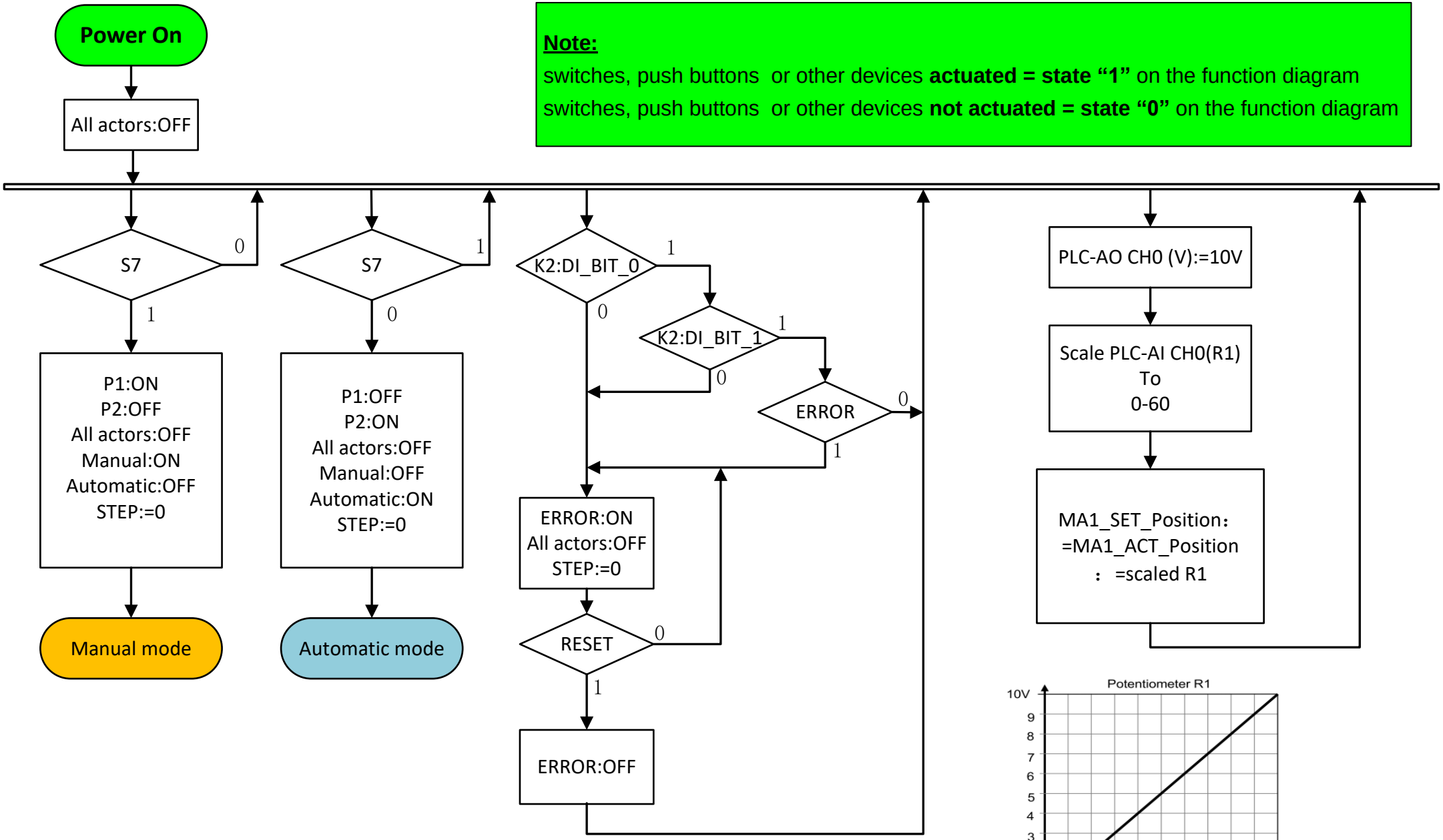

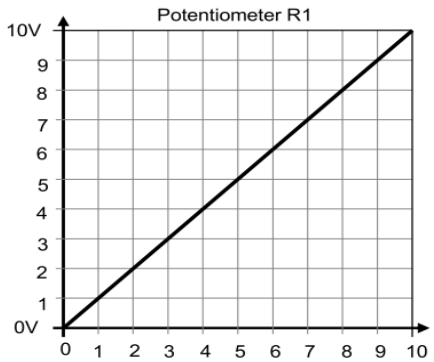

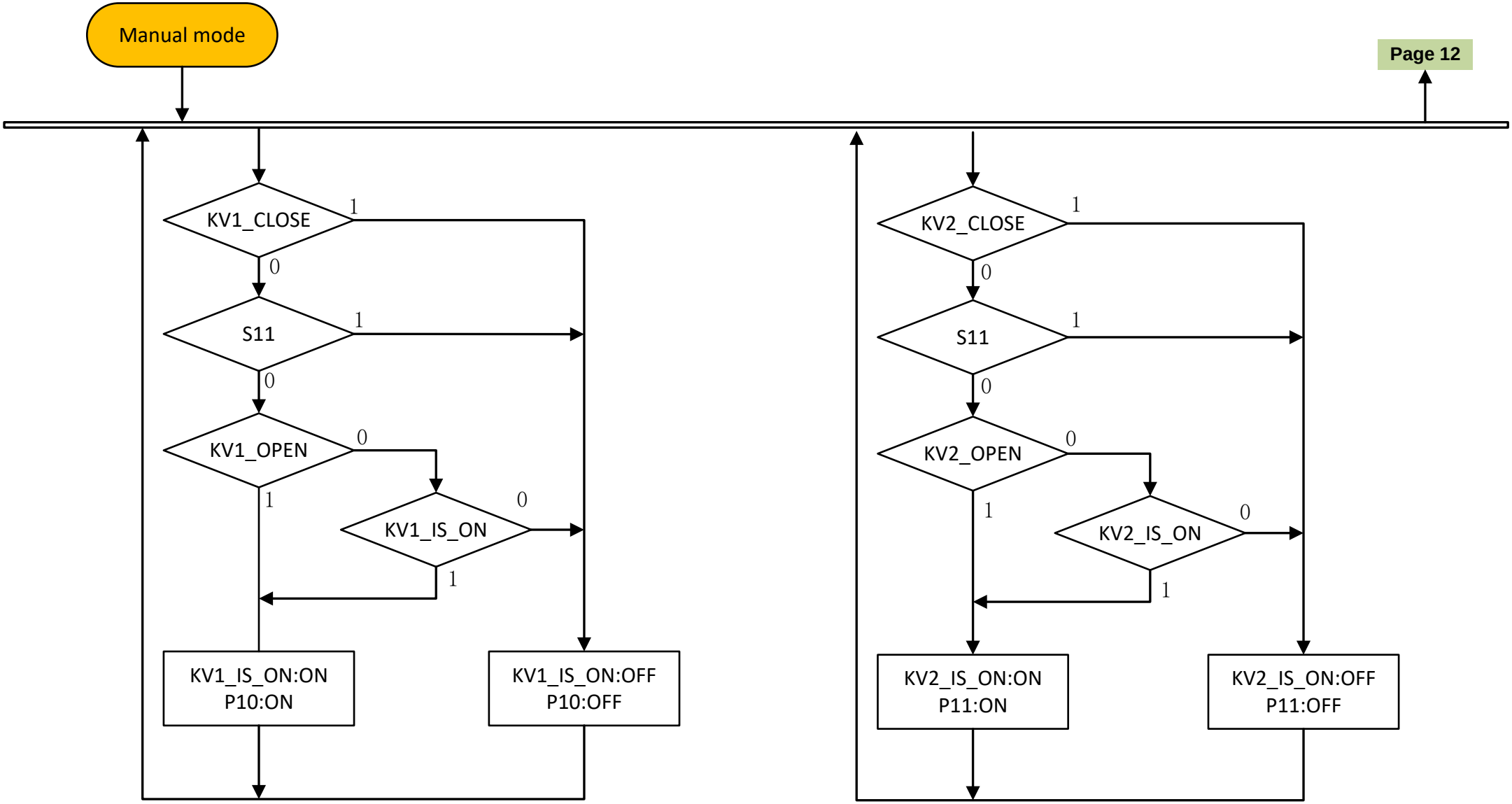
Manual mode
Page 12
KV1_CLOSE
1
0
S11
1
0
KV1_OPEN
0
1
KV1_IS_ON
0
1
KV1_IS_ON:ON
P10:ON
KV1_IS_ON:OFF
P10:OFF
KV2_CLOSE
1
0
S11
1
0
KV2_OPEN
0
1
KV2_IS_ON
0
1
KV2_IS_ON:ON
P11:ON
KV2_IS_ON:OFF
P11:OFF

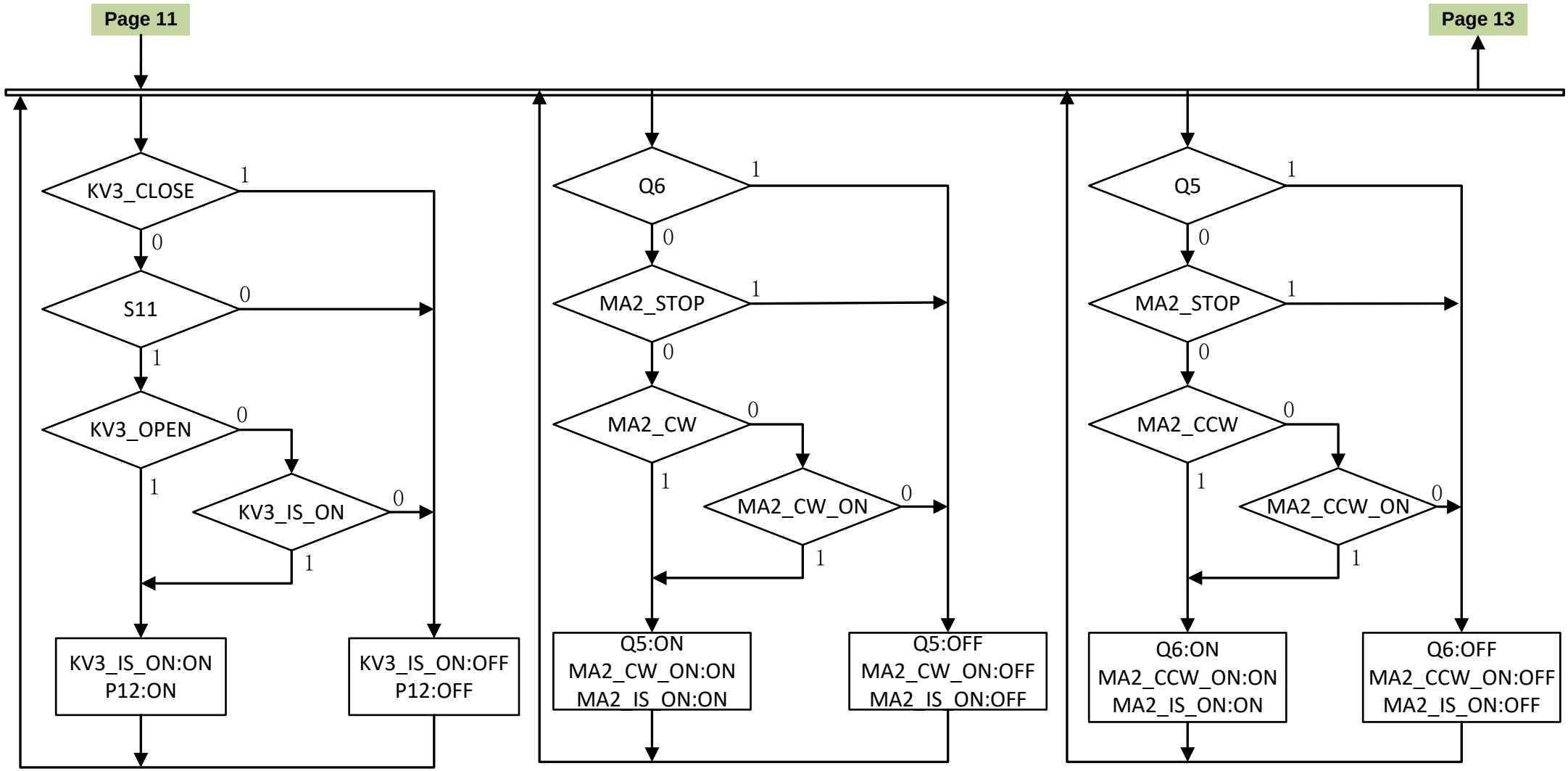
Page 11
Page 13
KV3_CLOSE
S11
KV3_OPEN
KV3_IS_ON
KV3_IS_ON:ON
P12:ON
KV3_IS_ON:OFF
P12:OFF
Q6
MA2_STOP
MA2_CW
MA2_CW_ON
Q5:ON
MA2_CW_ON:ON
MA2_IS_ON:ON
Q5:OFF
MA2_CW_ON:OFF
MA2_IS_ON:OFF
Q5
MA2_STOP
MA2_CCW
MA2_CCW_ON
Q6:ON
MA2_CCW_ON:ON
MA2_IS_ON:ON
Q6:OFF
MA2_CCW_ON:OFF
MA2_IS_ON:OFF

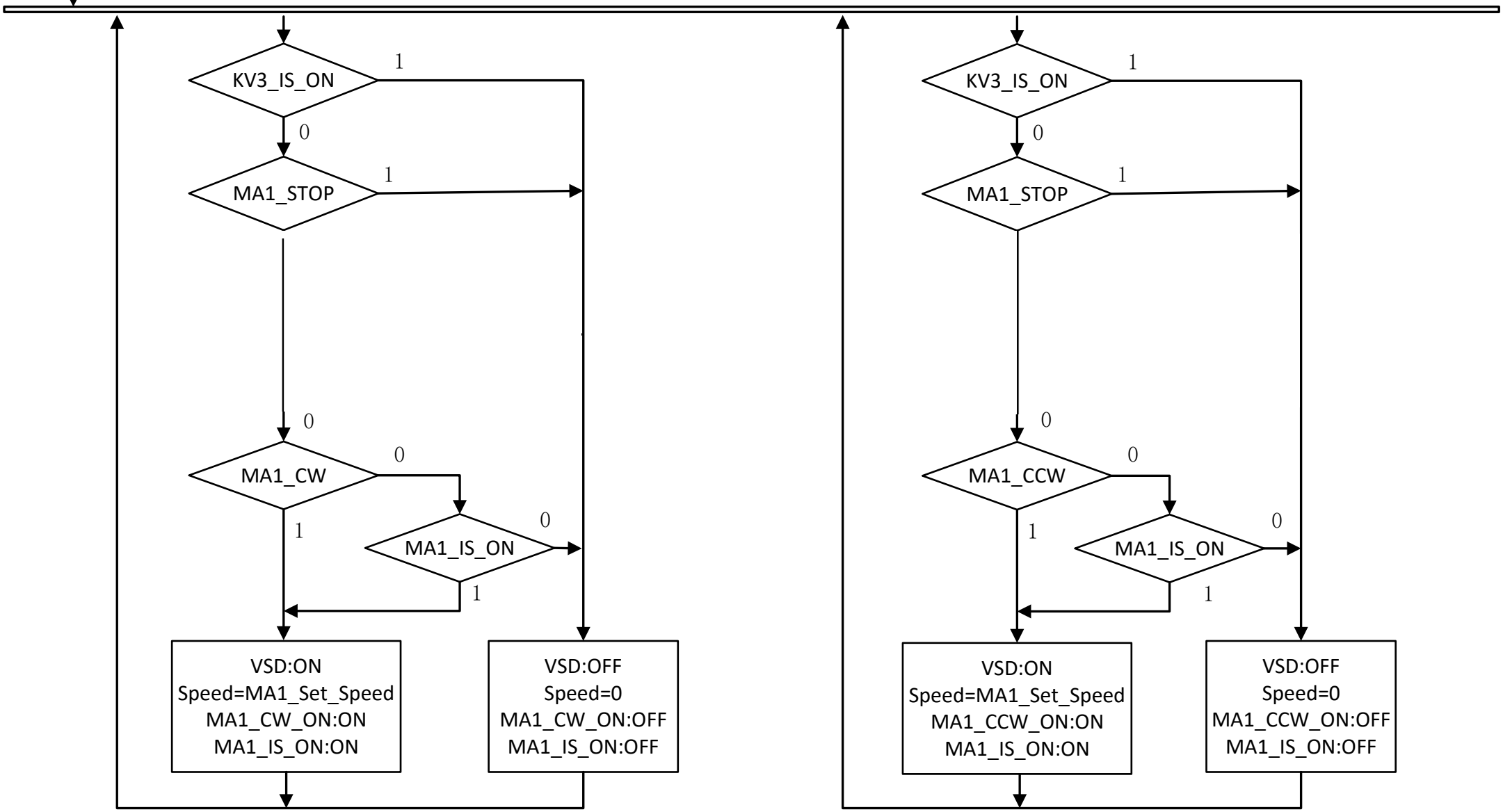
KV3_IS_ON
1
0
MA1_STOP
1
0
MA1_CW
0
1
MA1_IS_ON
0
1
VSD:ON
Speed=MA1_Set_Speed
MA1_CW_ON:ON
MA1_IS_ON:ON
VSD:OFF
Speed=0
MA1_CW_ON:OFF
MA1_IS_ON:OFF
KV3_IS_ON
1
0
MA1_STOP
1
0
MA1_CCW
0
1
MA1_IS_ON
0
1
VSD:ON
Speed=MA1_Set_Speed
MA1_CCW_ON:ON
MA1_IS_ON:ON
VSD:OFF
Speed=0
MA1_CCW_ON:OFF
MA1_IS_ON:OFF

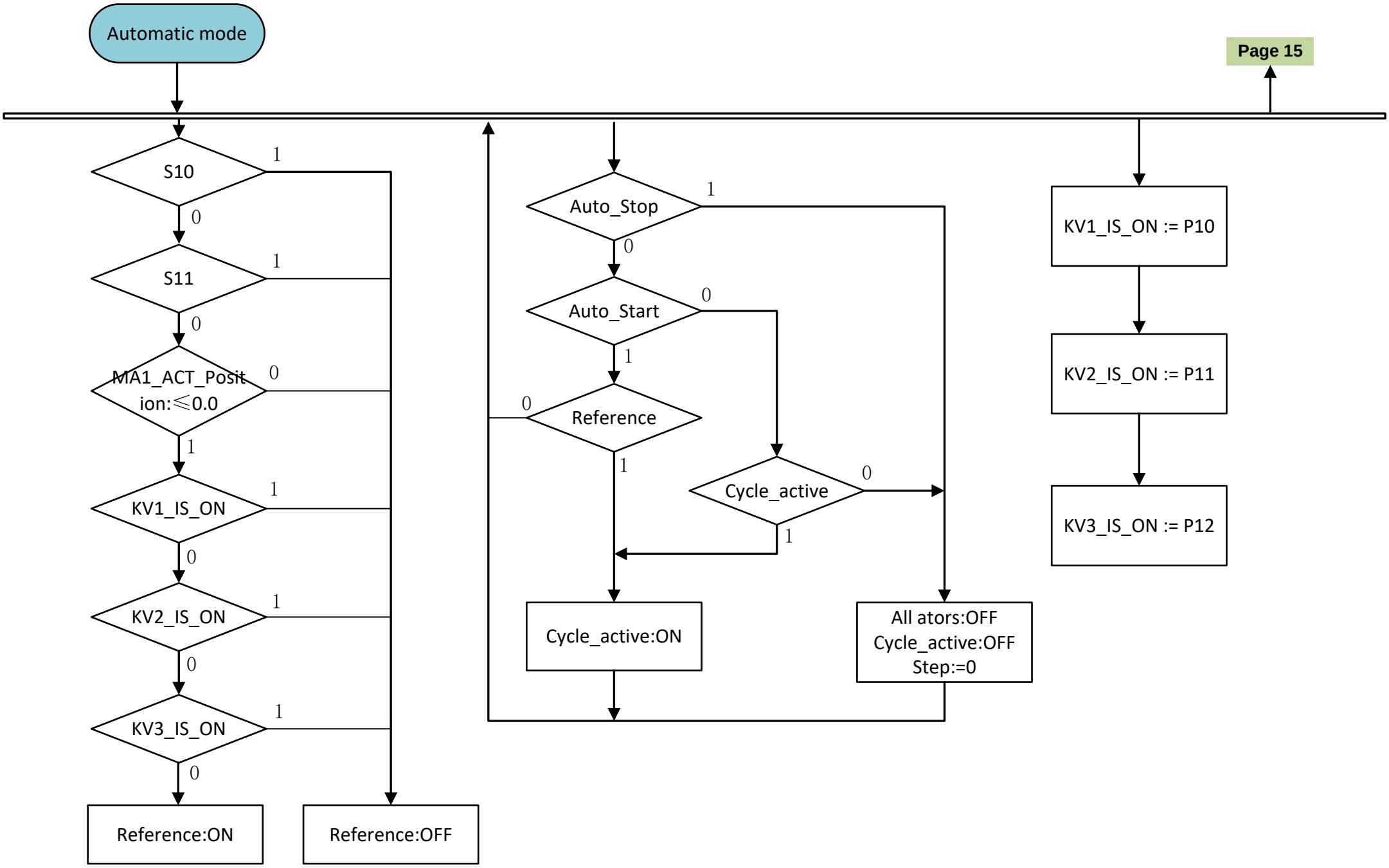
Automatic mode
Page 15
S10
S11
MA1_ACT_Position:≤0.0
KV1_IS_ON
KV2_IS_ON
KV3_IS_ON
Reference:ON
Reference:OFF
Auto_Stop
Auto_Start
Reference
Cycle_active
Cycle_active:ON
All ators:OFF
Cycle_active:OFF
Step:=0
KV1_IS_ON := P10
KV2_IS_ON := P11
KV3_IS_ON := P12
1
0

Page 14

Page 16

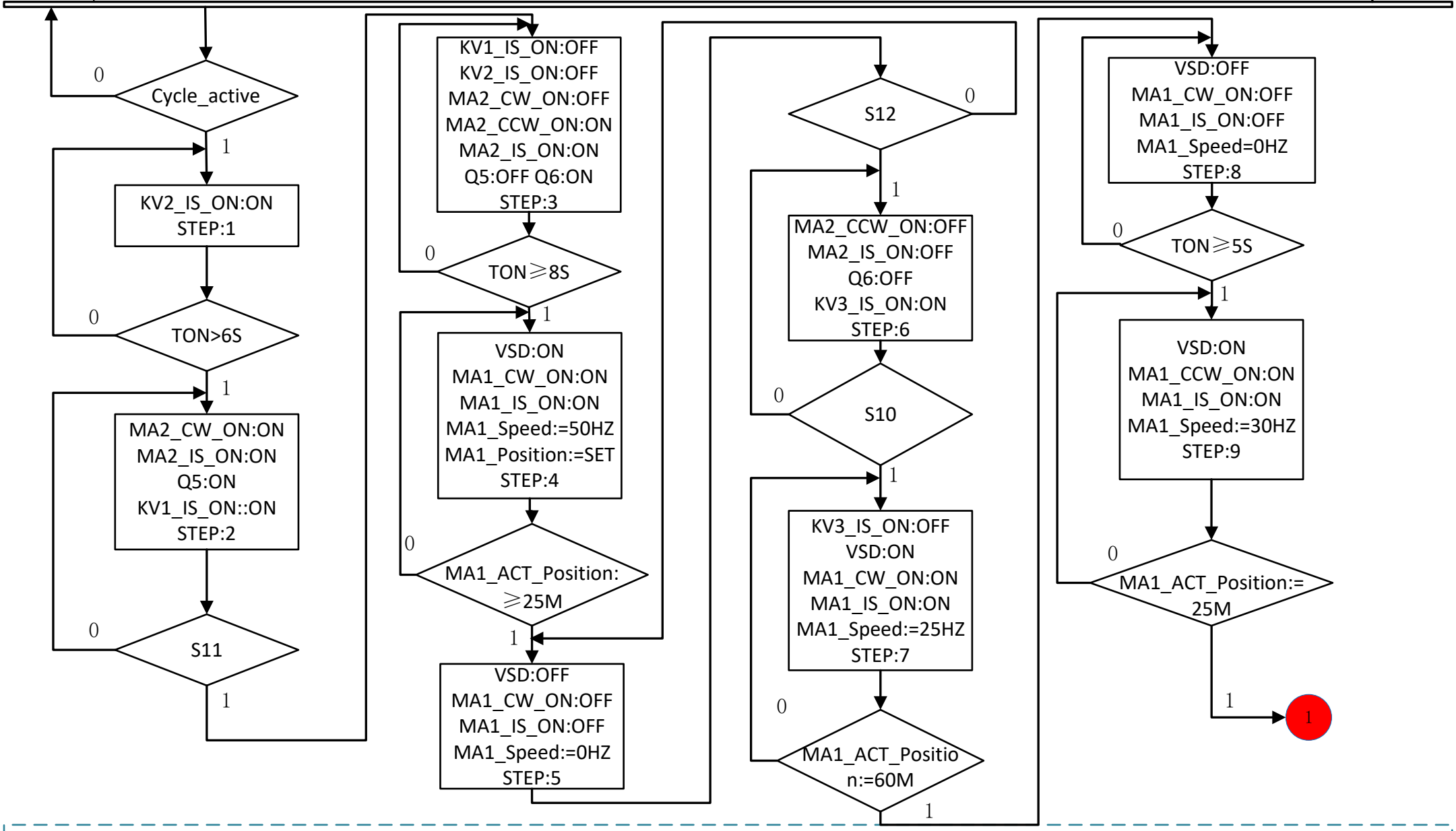

Page 15

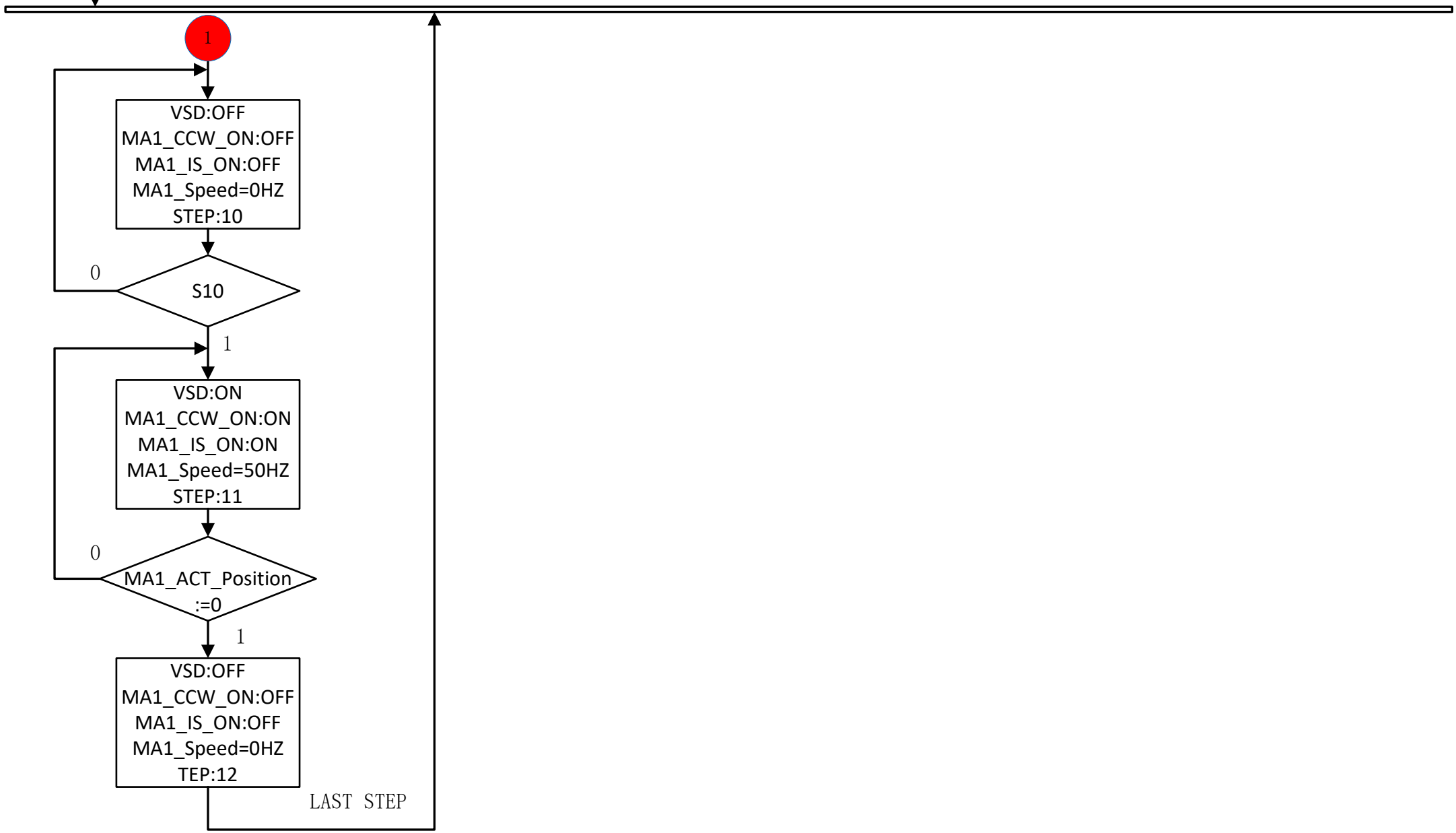

Page 16